MEDENUS

Gas Pressure Regulation



Gas Pressure Regulator R 101

Operating and Maintenance Instructions

EN

© 11.2023_01

Reprint prohibited!

Design of the gas pressure regulator R 101

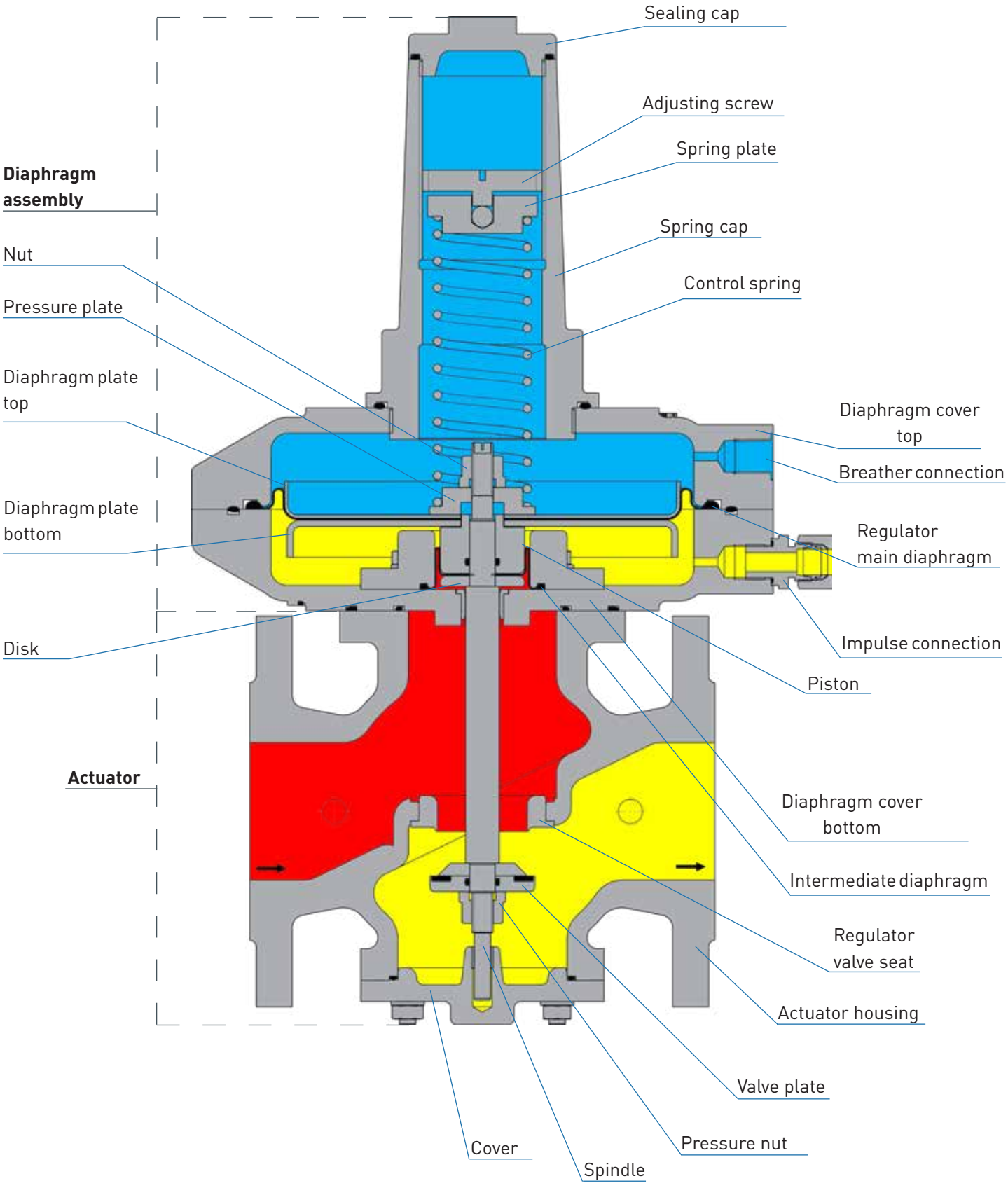

1 General Information **6**
1.1 Warranty and Liability 6
1.2 Symbols, Notes 7
1.3 Terms, Abbreviations 7

2 Application, Characteristics **8**
2.1 Application 8
2.2 Characteristics 8
2.3 Types of Models (Options) 8

3 Avoidance of Foreseeable Misuse **8**

4 Safety Instructions **9**
4.1 Hazards of Handling the Device 9
4.2 Personnel Requirements 9
4.3 Country-Specific Requirements 9
4.4 Handover of the Operating and Maintenance Instructions 9
4.5 Safety in Operation 10
4.6 What to Do in Case of Danger 10

5 Responsibility of the Operator **10**

6 Transport, Storage and Packaging **11**
6.1 Transport 11
6.2 Storage 11
6.3 Packaging 11

7 Mounting and Commissioning **12**
7.1 Safety Instructions and Preparation 12
7.2 Mounting 12
7.3 Leakage Test (Test for External Leakage) 14
7.4 Initial Commissioning / Recommissioning 15
7.5 Diaphragm assembly setpoint spring table 16
7.6 Decommissioning 17

8 Maintenance **18**
8.1 Maintenance Plan 18
8.2 Maintenance Procedure 18
8.3 Table of Screw Tightening Torques M_A 19
8.4 Lubricants Table 19

9 Troubleshooting **20**
9.1 Gas Pressure Regulator 20

10 Replacement and Disposal **21**

11 Spare Parts **22**
9.1 Spare Parts Drawing 22
11.2 Optional Spare Parts Drawing 22
11.3 Parts for Maintenance Work 23

12 Accessories / Options **26**
12.1 Noise Reduction 26
12.2 High-Pressure Spindle 28
12.3 RSD3 Restrictor Valve 29
12.4. SM Safety Diaphragm 30
12.5 Breather valve AV530 31

13 Tools **32**
13.1 Brace and Bit with 4-Jaw Chuck 32
13.2 SSV Tightening Tool 32

Declaration of Conformity 33
Notes 34

1 General Information

The personnel entrusted with installation, operation or maintenance of the gas pressure regulator must have completely read and understood beforehand the following documents:

- **Gas Pressure Regulator R 101 Product Information**
  The product information contains technical data, dimensions and a description of the design and the mode of operation.

- **Gas Pressure Regulator R 101 Operating and Maintenance Instructions**
  This document allows safe and efficient handling of the device and contains information on assembly, commissioning, maintenance, troubleshooting, and repair according to regulations.
  It is an integral part of the scope of delivery of the device, must be kept in close proximity of the device and must be readily accessible to personnel at any time.
  The basic prerequisite for safe working is compliance with all safety instructions and instructions for action given in this manual. Accordingly, the information and instructions must be observed when working on the device or on the gas line. In addition, the local occupational safety regulations and general safety regulations for the application range of the device shall apply.
  The illustrations in these instructions are provided for basic understanding of the regulator and may differ from the actual design.
  The contents of these instructions are protected by copyright. They may be used as part of operating the device. Any other use and/or reproduction is not permitted without prior authorization by MEDENUS Gas-Druckregeltechnik GmbH.

1.1 Warranty and Liability

Claims under warranty or liability for personal injury and material damage are generally void
if one or several of the following **conditions are not observed**:

- Work on the device during the warranty period may only be performed in consultation with the manufacturer
- Designated use of the device in accordance with the established conditions of use
- Proper installation, commissioning, operation and maintenance of the device
- Operation of the device with properly installed and functioning safety devices only
- Observe the operating and maintenance instructions of the device or the system
- Compliance with the maintenance instructions
- Properly performed repairs
- Supply lines without defects
- The use of original MEDENUS© spare parts and lubricants listed in these instructions or
- Force majeure

It is generally prohibited

- To perform constructive modifications on the device
- To keep using the device despite the detection of a defect

© 11.2023_01

1.2 Symbols, Notes

The instructions contain safety instructions marked with symbols to indicate possible consequences in case of non-observance:

This combination of symbol and signal word indicates a potentially hazardous situation which, if not avoided, may result in minor or moderate injury, damage to the device, the breakdown of the system, and material or environmental damage.



ATTENTION

This combination of symbol and signal word indicates an imminent hazardous situation which, if not avoided, will result in death or serious injury.



DANGER

This signal word highlights useful tips, recommendations, and information for efficient and trouble-free operation.

Note

1.3 Terms, Abbreviations

Terms and abbreviations are explained below:

ATC	Acceptance test certificate	p_d	Outlet pressure	SSV	Safety shut-off valve
DN	Nominal width / connection	p_{ds}	Setpoint of the outlet pressure	SRV	Safety relief valve
GPR	Gas pressure regulator			RE	Diaphragm assembly
MOP	Maximum operating pressure in a system				

© 11.2023_01

2 Application, Characteristics

2.1 Application

Gas pressure regulator (GDR), direct-acting (operating without auxiliary power), for systems acc. to DVGW work sheets G 491 (A) and G 600 (A) (TRGI)
Particularly suitable for dynamic regulation sections (e.g. gas fireplaces, burner circuits, gas motor operation)
Can be used as an equipment component on gas consumption facilities as defined in Regulation (EU) 2016/426.
Can be used for the gases defined in DVGW work sheets G 260 / G 262 and neutral non-aggressive gases.
(other gases on request)

2.2Characteristics

- Integral pressure-tight model (IS)
- Easy maintenance through replaceable functional units (modular design)
- Open-air model

2.3 Types of Models (Options)

- With throttle valve (RSD3) for impulse line of the regulator
- With noise reduction
- Coating with epoxy resin in RAL colors
- Hydrogen version
- Oxygen model
- Diaphragm assembly with safety diaphragm

3 Avoidance of Foreseeable Misuse

- The regulators must not be used to control liquids.
- The regulators must not be used in temperature ranges below -20 °C or above +60 °C
- The regulators must not be used for pressure ranges higher than the pressure "PS" indicated on the nameplate.

- The regulators may only be used for the gases specified under item 2.1 Application in these operating instructions.

  Other gases, such as oxygen or hydrogen, must be explicitly stated on the nameplate.
  Please consult the manufacturer before use.
- The regulators must not be used in high-temperature areas (HTB) without an upstream HTB fuse.

© 11.2023_01

4 Safety Instructions

National accident prevention regulations and the system operator's safety regulations are not superseded by these operating and maintenance instructions and must be taken into consideration with priority (in Germany, see, among others, DVGW work sheets G 600, G 459/II, G 491 and G 495).

When performing work on the device, the current general and specific safety regulations must be observed.
The application limits of the device with respect to the medium, operating pressure and operating temperature can be found on the nameplate affixed to the device or on the acceptance test certificate.
Using the device under different operating conditions must be agreed upon in consultation with
MEDENUS Gas-Druckregeltechnik GmbH.

The mechanical components of the device do not have any potential ignition sources of their own nor any hot surfaces and are thus not covered by the scope of ATEX 2014/34/EU. The electronic accessories used comply with the ATEX requirements.

4.1 Hazards of Handling the Device

MEDENUS© devices conform with current standards and directives, the recognized technical rules and the recognized safety rules.

However, improper use can result in hazards to the user or to third parties. This can also result in damage to the device or to the system.

This is why the device may only be used:

- in accordance with its designated use
- in perfect condition
- while observing the notes given in these operating and maintenance instructions, and inspection and maintenance regulations, which apply to the functioning and safety of the overall system.

Malfunctions or faults must be eliminated immediately.

4.2 Personnel Requirements

The device may only be mounted by qualified personnel.
Only authorized personnel with the required qualification is allowed to perform settings or repairs on the device.

4.3 Country-Specific Requirements

The rules and regulations applicable at the place of use must be observed and complied with. They apply to:

- gas lines, installation of the gas system
- gas supply
- work on the gas system
- accident prevention

4.4 Handover of the Operating and Maintenance Instructions

The supplier of the system shall hand over these operating and maintenance instructions to the operator of the system no later than during commissioning and training of the operating personnel with the reminder to carefully store these instructions.

© 11.2023_01

4.5 Safety in Operation

The device may only be used when all protective devices on the device or in the system are fully functional.

At least once a year, the device must be inspected for externally visible damage and for proper functioning by a representative of the manufacturer or by a qualified person.
A more frequent inspection may become necessary, depending on the system conditions.

4.6 What to Do in Case of Danger

Information on what is to be done in case of danger and in case of accidents can be found in the respective operator's or specialist companies' work instructions.

5 Responsibility of the Operator

Operator

An operator is a person who operates the device himself/herself for commercial or economic purposes or leaves it to a third party for use/application and is legally responsible for the safety of the user, the personnel or third parties during operation.

Operator duties

The device is used in the commercial sector. The operator of the device is therefore subject to the legal obligations for occupational safety. In addition to the safety instructions contained in these instructions, the established maintenance intervals must be observed, taking into account the respective national standard (alarm and hazard prevention plan).

In particular, the following applies:

- The operator is obliged to perform work on MEDENUS© devices during the warranty period only after consultation with the manufacturer. Otherwise the claims under warranty will become void.
- The operator must obtain information on the current occupational safety regulations and determine additional hazards resulting from the special work conditions at the place of use of the device in a risk assessment. The owner must implement the results in the form of operating instructions for the device.
- During the entire time of use of the device, the operator must check whether the operating instructions issued by him/her conform to the current state of the regulations and, if necessary, adapt them.
- The operator must clearly regulate and define the responsibilities for installation, operation, troubleshooting, maintenance and cleaning.
- The operator must ensure that all persons handling the device have read and understood these instructions. In addition, the owner must train the personnel at regular intervals and inform them about the hazards.
- The operator must make available to the personnel the required protective equipment and oblige them to wear the required protective equipment.
- Moreover, the operator is responsible for the device always being in technically perfect condition.

Therefore, the following applies:

- The operator must make sure that the maintenance intervals described in these instructions are observed.
- The operator must have all safety devices checked regularly for functionality and completeness.

© 11.2023_01

6 Transport, Storage and Packaging

6.1 Transport

Note

The device is delivered with flange protection caps. They must be removed prior to installation.
Make sure that the device is transported horizontally using suitable lifting gear. The device must be handled carefully and secured against impacts and knocks.
In case of transport damage, we will require the following information from the nameplate affixed to the device:

- Device type
- Device model
- Year of construction/fabrication number

6.2 Storage

Equipment and spare parts must be stored under the following conditions:

- Do not store outdoors.
- Store in a dry and dust-free location.
- Store on a flat surface.
- Do not expose to aggressive media.
- Do not expose to ozone or ionizing radiation.
- Do not store adjacent to direct heat sources.
- Avoid mechanical vibrations.
- Storage temperature: 0 to 25 °C.
- Relative air humidity: < 55 %.

Spare parts:

- Components susceptible to corrosion must be provided with a suitable preservative.
- Do not store O-rings and seals for more than 5 years even if stored properly.
- Spare parts must be stored in their original packaging until use.

Storage period for devices:

- Storage of the device for up to one year:
  Store the gas pressure regulator in its original packaging and original condition at the time of supply. All protective caps of the device must remain mounted.
- Storage of the device for more than 1 year (e.g. as a spare device):
  Store the device in its original packaging and its original condition as delivered and check it for damage once a year. Check the housing surface for dirt, damage and corrosion. If necessary, clean all external parts. After 5 years, all O-rings and seals must be replaced.

6.3 Packaging

- The individual packaged items have been packaged in view of the transport conditions to be expected.
- The symbols on the packaging must be observed during transport and storage.
- Only environmentally friendly materials have been used for packaging.
- The packaging is designed for protecting the individual components from transport damage, corrosion and other damage until mounting. This is why the packaging must not be destroyed and only removed just prior to mounting.

© 11.2023_01

7 Mounting and Commissioning

7.1 Safety Instructions and Preparation

Prior to starting work on pressurized components:

DANGER



- Close all connections to the gas line.
- Depressurize all pressurized components. Also discharge residual energies.
- Defective components charged with pressure in operation must be replaced immediately by an appropriate expert.

Note

Prior to starting work, ensure sufficient clearance for mounting.
Before installing the device, check whether the performance data (nameplate) and the scope of delivery coincide with the order or the system data, i.e., make sure that the provided devices are suitable for their intended purpose. In particular, the inlet pressure of the system must be lower than the maximum allowable pressure of the device.

Note

Direct contact of gas valves and fittings, i.e., the control system, with hardening masonry, concrete walls or floors is not permitted. Provide suitable supports, working materials and protective equipment.
Take into account the minimum clearances for maintenance as stated in the product information.
Before installing the device in the pipeline, check whether a shut-off device that interrupts the gas flow supply to the device has been mounted upstream and downstream of the device to be installed.

DANGER

Prior to commissioning, make sure that all installation work has been carried out and completed in accordance with the data and information given in these instructions and that no unauthorized persons stay in the danger zone.



7.2 Mounting

- Remove the packaging, flange protection caps and shipping braces.
- Check the device for wear and damage.

Note

- Make sure that the device is installed free of stress (see DVGW info gas no. 19).
  Make sure to observe the direction of flow i.e., the arrow on the housing must point in the direction of flow.

Note

Note

- All breather lines (items 7.04 / 7.07) must be vented to the outside atmosphere.
- The breather line (item 7.04) may not be required if breather valves are used

Tightening torques M_A*)

Gas pressure regulators		Flange tightening torques	
Screw size	Screw tightening torque M_A	Screw size	Screw tightening torque M_A
M6	8 Nm	M12	60 Nm
M8	18 Nm	M16	120 Nm
M10	36 Nm	M20	190 Nm
M12	62 Nm		

*) For the assembly of the flange connections, the maximum torques specified by the flange and gasket manufacturers must be observed. The values indicated here should be considered as approximate values.

© 11.2023_01

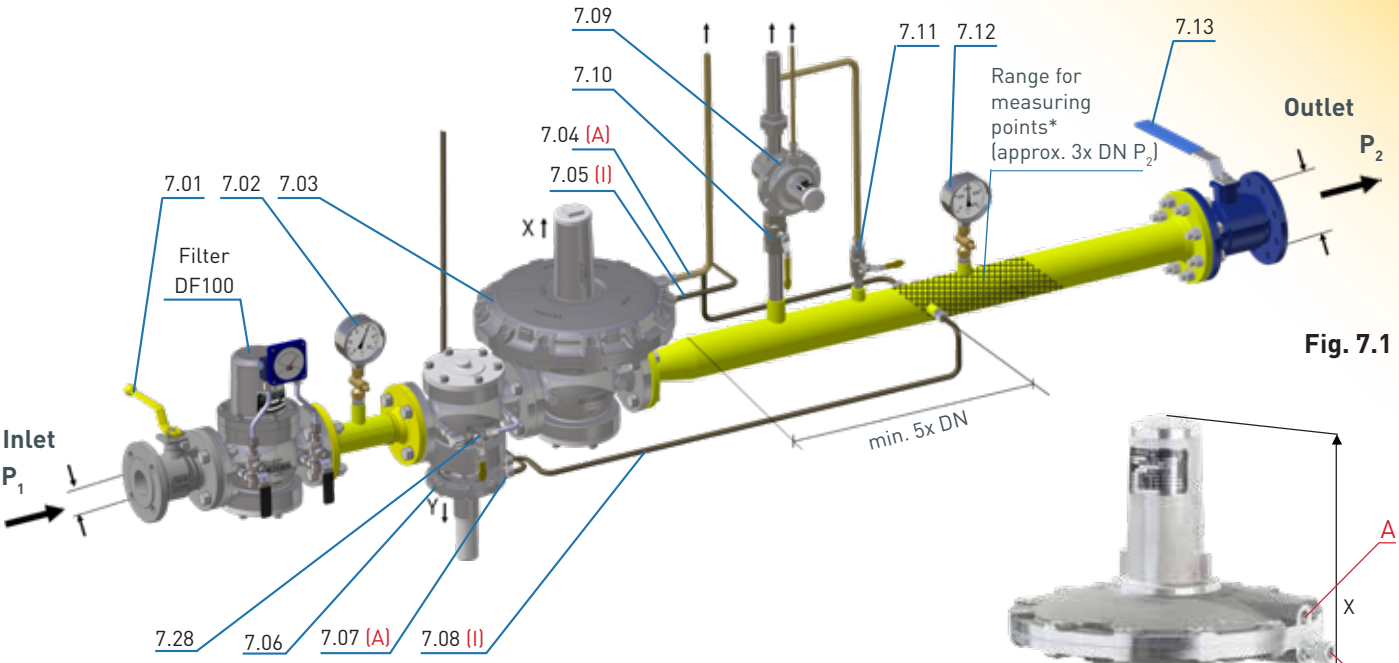

Fig. 7.1

- Breather lines (items 7.04 / 7.07) may not be required if breather valves or safety diaphragms are being used.

- The measuring lines (items 7.05 / 7.08) must be connected in a pipeline section with a steady flow. There must be no installations that cause flow interference such as shutters, expansions, manifolds, junctions, isolation valves etc. directly upstream and downstream of the measurement point.

- The maximum flow rate at the measuring point must not exceed 25 m/s, depending on the system conditions.
- In certain system circuits, such as gas control systems for gas motors and in gas burners, higher flow rates than 25 m/s are also possible. Please contact us.
- The measuring line must be connected to the pipeline or to the measuring point separately, laterally or at the top for each device (1 gas pressure regulator (item 7.03); 1 integrated SSV (item 7.06)).
- The SSV measuring line (item 7.08) must always be connected upstream of the first shut-off valve (item 7.13) on the outlet side in such a way that it cannot be shut off.

			DN Nennweite /nominal size					Anschluss Regler / connection Regulator		Anschluss Regler Bohrungsdurchmesser / Connection hole regulator diameter (mm)					
										Impulsleitung / impulse line (I) Atmungsleitung / breathing line (A)					
										Diaphragm cover Ø					
	Abmessung / dimension (mm)	RE	25	40	50	65	100	Impuls-leitung / impulse line (I)	Atmungs-leitung / breathing line (A)	160	205	275	330	385/ 390	485
R101	X	160	356	356	-	-	-	RP 3/8"	RP 3/8"	3		4		6	8
		205	364	364	408	376	-								
		275	-	-	408	376	661								
		330	346	346	-	-	-								
		385/390	-	-	408	376	661								
		485	-	-	-	-	661								
	Y		84	84	115	101	188								
	Z		160	160	250	220	350								

© 11.2023_01

7.3 Leakage Test (Test for External Leakage)

The devices are subjected to a strength and leakage test ex works at MEDENUS Gas-Druckregeltechnik GmbH.

The leakage test in the fully assembled system must be performed prior to commissioning and following maintenance work.
For the external leakage test in the fully assembled system, the following applies:

For Germany:
According to DVGW work sheet G 491, the fully assembled system must be subjected to a leakage test with air or an inert gas at the installation site, using 1.1 times the maximum operating pressure of the system (MOP).
An exception is the room between the actuator and the first shut-off valve on the outlet side. This room must be checked using the test pressure corresponding to the maximum permissible pressure in the system in case of a malfunction (1.1 MOP_d). In this test, all detachable connections must be checked using a foaming agent.

In direct-acting devices (without power supply), the outlet pressure acting on the actuator should not be more than 0.5 bar above the set setpoint. This should be taken into account when specifying the response pressure of the upstream SSVs.

Note

Recommended upper response pressures:

- $p_d \leq 100$ mbar $p_{dso} = P_d + 50$ mbar
- $p_d > 100 - 200$ mbar $p_{dso} = P_d + 100$ mbar
- $p_d > 200 - 1000$ mbar $p_{dso} = P_d \times 1{,}5$
- $p_d > 1000$ mbar $p_{dso} = p_d + 500$ mbar

For other countries:
The relevant national and international standards shall apply.

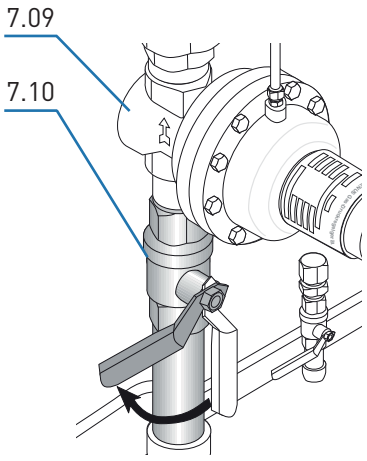

Procedure

- Close the ball valve upstream of the valves and fittings (item 7.01).
- Close the downstream shut-off devices (item 7.13) (ball valve, solenoid or pneumatic valve).
- Depressurize the system (item 7.11).
- If there is a SRV (safety relief valve) in the controlled section and the test pressure is higher than the relief pressure of the SRV (item 7.09), the line upstream of the SRV (item 7.10) must be closed.
- Connect the testing device to measuring points upstream and downstream of the gas pressure regulator (items 7.02 / 7.12).
- Always increase the test pressure slowly and steadily (max. 500 mbar/sec.)

Note

While doing so, you must ensure:
Pressure in outlet chamber (item 7.12) ≤ pressure in inlet chamber (item 7.02)
Pressure build-up always from the inlet side (inlet chamber)
Pressure reduction always from the outlet side (outlet chamber)

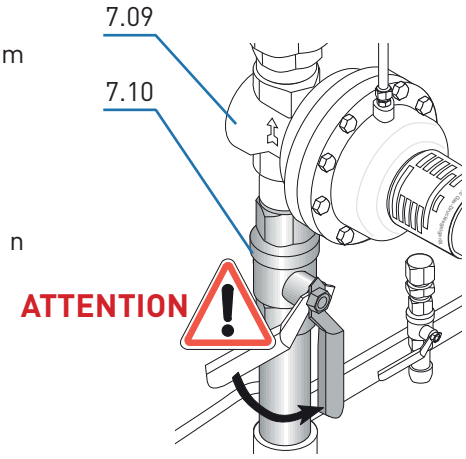

- After leakage test: O p e n the ball valve in the SRV line (item 7.10) again.

© 11.2023_01

7.4 Initial Commissioning / Recommissioning

Initial commissioning of the system components shall be carried out by the operator. For commissioning, please refer to the documents listed under item 1 "General Information" and the system operator's work instruction.
The devices delivered by MEDENUS Gas-Druckregeltechnik GmbH are factory-set to the operating data specified by the customer. This data is listed on the Acceptance Test Certificate (ATC)* and the type plate.

Note

Prior to commissioning of the system, a functional test must be performed on the gas pressure regulator (GPR), if applicable, and the safety shut-off and safety relief valves.

Procedure

- Close the ball valve upstream of the valves and fittings (item 7.01).
- Close the downstream shut-off devices (item 7.13) (ball valve, solenoid or pneumatic valve).
- Depressurize the system (item 7.11).
- Close the venting ball valve (item 7.11).
- Slowly open ball valve upstream of the valves and fittings (item 7.01) (max. 500 mbar/sec.).

Note

If the inlet shut-off device is equipped with a bypass, the latter must be slowly opened for pressure compensation as step 1. This is followed by slowly opening the inlet shut-off valve which will close the bypass. The same is true of the outlet shut-off valve.

- For the functional test of the GPR, let gas flow via the discharge line (venting) (item 7.11) to the outside atmosphere and read the set regulating pressure on the outlet pressure gauge (item 7.12).
- It may be necessary to correct the setpoint of the outlet pressure.
  This is done by turning the GPR setpoint setting screw (item 7.22) to the right or left, in order to increase and decrease the setpoint, respectively, after removal of the GPR sealing cap (item 7.21).
- After closing the discharge line (item 7.11), a constant closing pressure within the closing pressure class can be read on the outlet pressure gauge (item 7.12).
- Slowly open the shut-off valve (item 7.13), close the discharge line (item 7.11) and read the set regulating pressure on the outlet pressure gauge (item 7.12).
- It may be necessary to correct the setpoint of the outlet pressure once again.
- Screw on the GPR sealing cap (item 7.21) again.

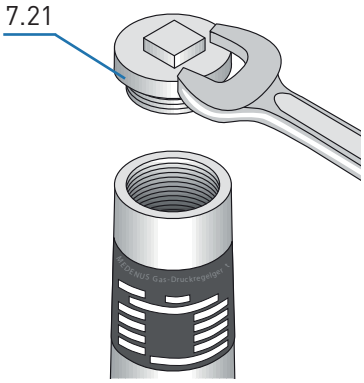

*) Acceptance Test Certificate (ATC) available optionally

© 11.2023_01

Changing the control range

Switching to the control range of a different setpoint spring can be done for the GPR while the device is pressurized.

- Take off the sealing cap (item 7.21) and unscrew the setting screw (item 7.22),
- Pull out the spring (item 7.25) and replace the spring with one that fits.
- Screw in the setting screw (item 7.22) again.
- Set the desired setpoint and screw on the sealing cap (item 7.21).

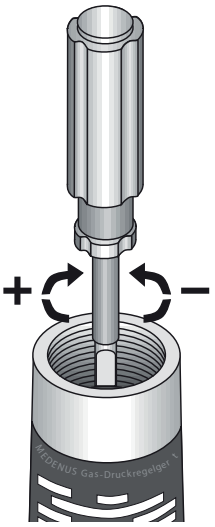

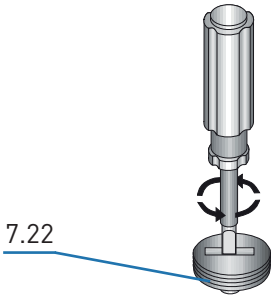

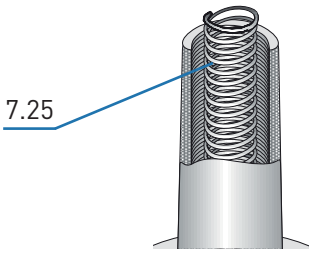

7.5 Diaphragm assembly setpoint spring table

Specific command range W_{ds} [mbar]					Spring data	
RE 160	RE 205	RE 275	RE 330	RE 390	Spring no.	Color [RAL]
-	-	-	22 - 29	-	FA 05	7037
-	-	-	28 - 39	22 - 24	FA 06	9005
-	-	-	38 - 54	23 - 32	FA 07	3020
-	-	-	53 - 77	31 - 45	FA 08	9010
-	200 - 295	130 - 156	76 - 111	42 - 64	FA 09	7016
750 - 899	280 - 430	141 - 225	130 - 166	59 - 94	FA 10	6010
802 - 1371	419 - 653	208 - 339	165 - 250	88 - 142	FA 11	2002
1143 - 1200	595 - 935	293 - 484	239 - 361	124 - 203	FA 12*	7035
-	819 - 1408	436 - 726	360 - 544	185 - 305	FA 13*	5010
-	1245 - 1976	607 - 1017	506 - 765	258 - 428	FA 14*	1028
-	1212 - 2553	699 - 1100	535 - 800	297 - 450	FA 15*	6018
-	1330 - 3000	-	-	-	FA 16*	3020

© 11.2023_01

Specific command range W_{ds} [mbar]			Spring data	
RE 275-2	RE 385	RE 485	Spring no.	Color [RAL]
-	-	22 - 25	FB 702	9006
-	-	24 - 31	FB 703	5015
-	-	28 - 36	FB 704	4002
-	-	33 - 44	FB 705	7037
-	-	41 - 56	FB 706	9005
-	-	51 - 71	FB 707	3020
-	150 - 167	65 - 94	FB 708	9010
350 - 450	165 - 215	82 - 118	FB 709	7016
397 - 596	212 - 285	105 - 155	FB 710	6010
542 - 814	280 - 390	140 - 209	FB 711	2002
742 - 1078	385 - 520	188 - 275	FB 712	7035
977 - 1442	515 - 671	246 - 369	FB 713*	5010
1245 - 1878	661 - 850	311 - 450	FB 714*	1028
1547 - 2469	-	-	FB 715*	6018
2136 - 3000	-	-	FB 716*	3020

*) with high-pressure spindle

7.6 Decommissioning

For decommissioning, please refer to the documents listed under item 1 “General Information” and the system operator's work instruction.

Procedure

- Slowly close the outlet shut-off valve (item 7.13) or
- Slowly lower the outlet pressure via the setpoint setting screw until the reserve rail takes over the gas supply or
- Slowly raise the setpoint of the reserve rail until the operating rail is disabled.
- Close the ball valve upstream of the valves and fittings (item 7.01).
- Depressurize the system (item 7.11).
- Close the venting ball valve (item 7.11).

© 11.2023_01

8 Maintenance

8.1 Maintenance Plan

The maintenance regulations of the system manufacturer must be observed. The following sections describe the maintenance work required for optimal and trouble-free operation of the device.
If increased wear is detected during regular inspections, the required
maintenance intervals must be shortened in accordance with the actual wear.
For any questions on maintenance work and intervals, please contact the manufacturer.
The intervals for monitoring and maintenance work are strongly dependent on the
operating situation and the condition of the gas. This is why no fixed intervals
can be given. For Germany, it is recommended that the maintenance periods as specified in DVGW work sheet G 495 are observed initially.
For each system, this must be followed by
determining the maintenance interval independently on a medium-term basis.

During maintenance work, the components must be cleaned and subjected to a thorough visual inspection. This is also necessary if irregularities in the operating behavior have been detected during operation or during functional tests.

The check must cover the elastomers in particular.

Damaged parts and O-rings dismounted during dismantling must be replaced with new ones.
It is recommended to stock the parts listed in chapter 11 on page 22 for maintenance work.

Interval	Maintenance work	Personnel
According to the data given in the DVGW work sheet G 495 or if necessary	Replacing O-rings	Qualified person
	Replacing diaphragms	
	Replacing the valve plate	

8.2 Maintenance Procedure

The maintenance procedure is described in detail step-by-step in our video tutorial and our pictorial descriptions. Instructions for our products can be found in the download area of our website. Should you have any problems, please feel free to contact us directly.

If components have been removed, make sure they are mounted correctly, reinstall all fastening elements and observe the screw tightening torques.

ATTENTION



Prior to recommissioning, observe the following:

- Make sure that all maintenance work has been carried out and completed in accordance with the data and information given in these instructions.
- Make sure that no unauthorized persons stay in the danger zone.
- Make sure that all covers and safety devices have been installed and are working properly.

DANGER



For recommissioning, please refer to the relevant manufacturer's documentation of the gas pressure regulator installed in the system, the work instructions of the system operator, and the other safety regulations of the system in which the gas pressure regulator has been installed.

To guarantee smooth operation, we recommend always keeping a maintenance set in reserve.

Note

© 11.2023_01

8.3 Table of Screw Tightening Torques M_A

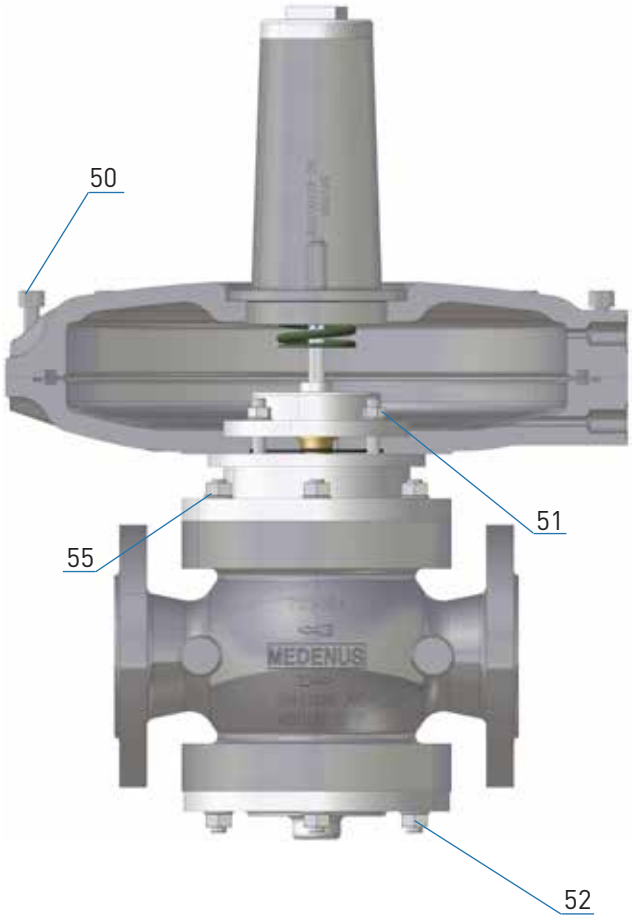

Item no.	Exception	R101 / 025 R101 / 040	R101 / 050	R101 / 065	R101 / 100
50		M8 / 18 Nm	M10 / 36 Nm	M10 / 36 Nm	M10 / 36 Nm
	RE 205	M10 / 36 Nm			
51			M8 / 18 Nm		
52		M8 / 18 Nm	M10 / 36 Nm	M8 / 18 Nm	M10 / 36 Nm
55		M8 / 18 Nm	M10 / 36 Nm	M8 / 18 Nm	M10 / 36 Nm

8.4 Lubricants Table

Components (apply a thin layer)	Lubricants	Article no.
All O-rings	Syntheso Proba 270	SYNTHESO-PROBA-270
All fastening and locking screws	Anti Seize AS 450	AS-450

Oxygen model

For oxygen models, a suitable grease which is approved for the use with oxygen must be used.

ATTENTION



© 11.2023_01

9 Troubleshooting

9.1 Gas Pressure Regulator

Description of the error	Possible cause	Elimination
Closing pressure too high No closing pressure	Actuator dirty or damaged	Check valve plate (seal) and valve seat for damage and dirt, replace valve plate, if necessary
	Static sealing elements defective	Replace O-rings
	Clamping of the compensating diaphragm has come off Compensating membrane is damaged or mounted incorrectly	Check compensating diaphragm for fastening, damage, and correct fit, replace it, if necessary
	Valve plate has become disconnected from the valve stem	Tighten nut under the valve plate
	Valve plate dirty or damaged	Clean the valve plate (use exclusively NBR-compatible cleaning agent)
Unstable outlet pressure curve (vibrations, pulsation)	Device is working in the closing pressure range	Check regulator design
	Vibration resonance in the control system	Install restrictor plate in breather line Install baffle plate in measuring line (see p. 29)*. Continue closing restrictor in measuring line by turning clockwise*. Install a stronger spring (setpoint spring of the next higher control range) Check setting of gas consumption devices Use of throttle valve RSD3 (optional accessory)
Control deviation too large / setpoint is not reached	Unfavorable connection of the measuring line	Select a measuring point with steady flow, check measuring point
	Sluggishness of the device due to dirt	Subject device to maintenance
	Main diaphragm or compensating diaphragm defective or mounted incorrectly	Check diaphragm and replace it, if necessary Default setting at 50% of the volume
	Wrong regulator size selected Wrong setpoint spring selected	Check regulator design Check setpoint spring and replace it, if necessary
	Inlet pressure supply is insufficient (pressure losses in the supply line too high)	Increase inlet pressure Check pipeline cross-section Check built-in filter
Inadmissible pressure peak Dynamic closing pressure too high	Damping of the device too high Control system too dynamic	Remove baffle plate from measuring line Remove restrictor plate from breather line Check breather lines, choose a larger diameter, if necessary Replace breather valve with breather line
	Closing speed of downstream shut-off devices too high	Reduce closing speed of shut-off valve
Noise	Gas velocity too high	Check regulator design
	Sluggishness of the device due to dirt / wear	Perform maintenance on actuator If worn-out mechanically, replace it, if necessary
Gas escapes through breather line	Fastening of the main diaphragm has come off Main diaphragm is damaged or has been mounted incorrectly	Check diaphragm for fastening, damage, and correct fit

*) Excessive damping limits the actuation speed.

Note

© 11.2023_01

10 Replacement and Disposal

After the device has reached the end of its useful life, it must be dismounted and disposed of in an environmentally compatible manner.
During dismounting, components that may present a risk of injury by contamination, depending on the medium, are removed. Depending on the processed medium, the components must be properly decontaminated. Diffusible components (diaphragm, O-ring, etc.) may have to be taken to a special disposal unit, depending on the medium used.

ATTENTION



If no return or disposal agreement has been signed, disassembled components should be recycled:

- Metals should be scrapped
- The remaining components should be disposed of after sorting according to material.
-

Alternatively, scrapping by MEDENUS can be agreed with the service. The return is at your own expense, the disposal by MEDENUS is free of charge.

For technical information, please contact our customer service:

MEDENUS Gas-Druckregeltechnik GmbH
Im Langen Feld 3
D-57462 Olpe

Phone +49 (0) 2761 / 82788-0
Fax +49 (0) 2761 / 82788-9

E-mail service@medenus.de
Internet www.medenus.de

In addition, we are always interested in information, suggestions and experience resulting from the application and which can be valuable for improving our products.

Note

© 11.2023_01

11 Spare Parts

9.1 Spare Parts Drawing

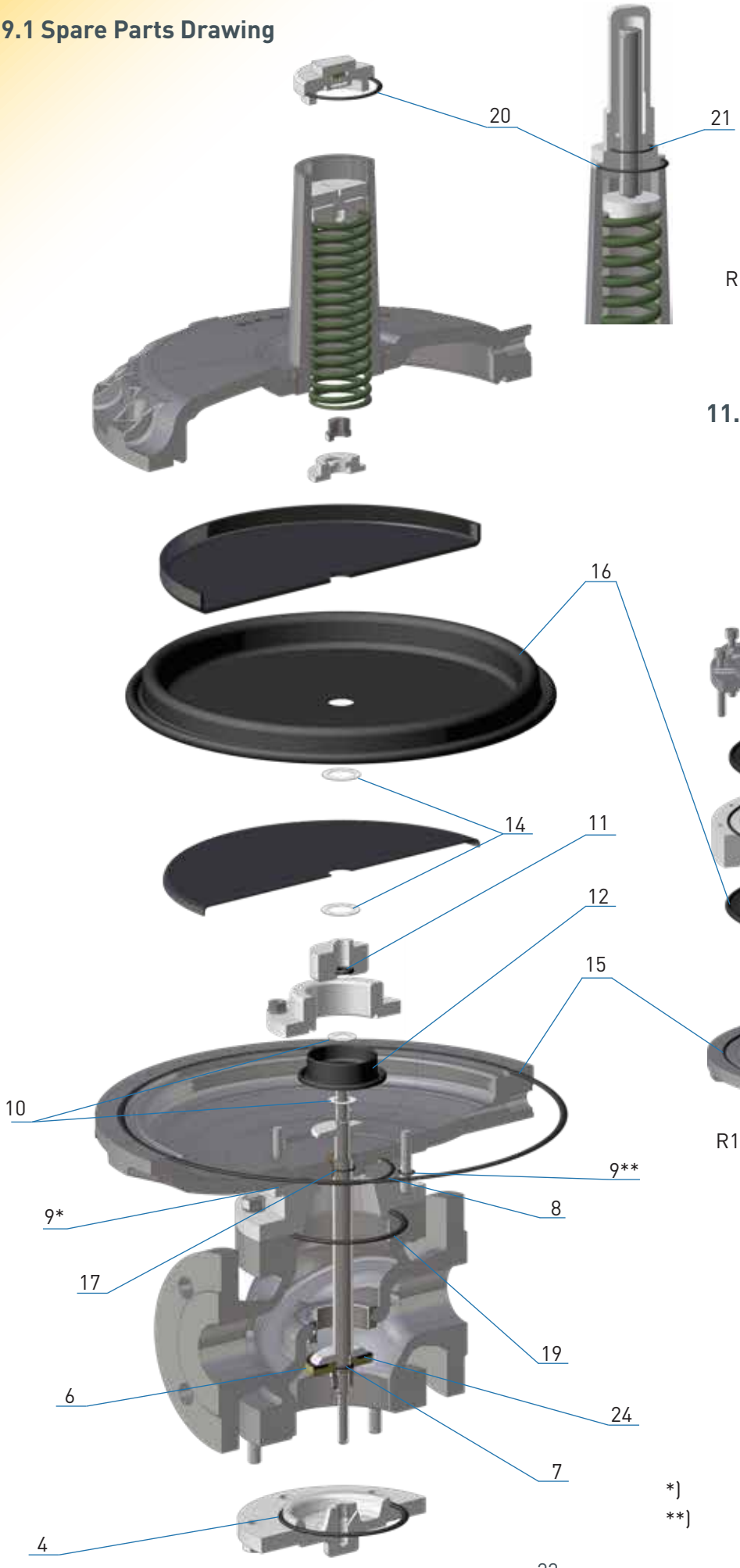

R101 shown with high-pressure spindle HDS

11.2 Optional Spare Parts Drawing

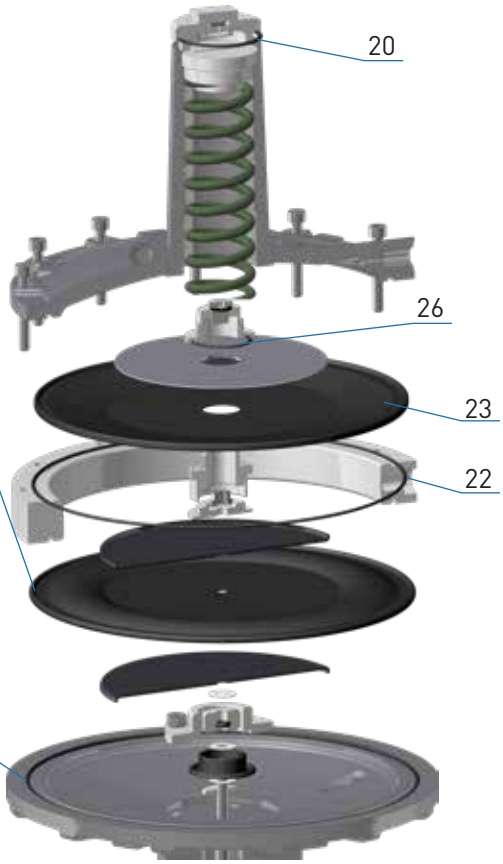

R101 shown with safety diaphragm

*) 1x O-ring at RE 160 / 205 / 275 / 385
**) 4x O-ring at RE 320 / 390
8x O-ring at RE 485

© 11.2023_01

11.3 Parts for Maintenance Work

Main diaphragm and O-ring

Item no.	Name	Quantity pcs.	R101 / 025; R101 / 040			R101 / 050; R101 / 065; R101 / 100				
			RE 160	RE 205	RE 320	RE 205	RE 275	RE 385 / 390 MB	RE 385 / 390 GMB	RE 485
15	O-ring	1		O-029	O-033	O-029	O-041	O-042	O-042	O-043
16	Diaphragm	1	M-111	M-121	M-141	M-122	M-132	M-152	M-162	M-172
Main diaphragm set order number:			**M-111**	**MS-121**	**MS-141**	**MS-122**	**MS-132**	**MS-152**	**MS-162**	**MS-172**

Intermediate diaphragm

Item no.	Name	Quantity pcs.	Valve	R 101 / 025 R 101 / 040	R 101 / 050 R 101 / 065	R 101 / 100
12	Diaphragm	1	17.5	**M-001**		
			27.5	**M-002**		
			32.5	**M-004***	**M-005**	
			42.5		**M-006**	
			52.5		**M-008**	
			65			**M-010**
			95			**M-012**

Valve plate

Item no.	Name	Quantity pcs.	Valve	R 101 / 025 R 101 / 040	R 101 / 050 R 101 / 065	R 101 / 100
6	Valve plate	1	17.5	**VT-001**		
			27.5	**VT-002**		
			32.5	**VT-004***	**VT-005**	
			42.5		**VT-006**	
			52.5		**VT-007**	
			65			**VT-008**
			95			**VT-010**

*) only in R101 / 040

© 11.2023_01

O-Rings and Sealing Rings

Item no.	Name	Quantity pcs.	Exception	R101 / 025 R101 / 040	R101 / 050	R101 / 065	R101 / 100
4	O-ring	1		O-014	O-036	O-018	O-044
7	O-ring	1		O-007	O-009	O-009	O-009
8	O-ring	1		O-014	O-035	O-035	O-026
			RE 320	O-004			
9	O-ring	1		O-019	O-039	O-039	O-031
		4	RE 320	O-002			
			RE 390		O-002	O-002	
10	NBR ring	2		N-001	N-002	N-002	N-002
11	O-ring	1		O-007	O-009	O-009	O-009
14	NBR ring	2		N-001	N-003	N-003	N-003
17	O-ring	1		O-008			
19	O-ring	1			O-036		
20	O-ring	1		O-015	O-015	O-015	O-036
	O-ring	1	Cast sealing cap	O-014	O-014	O-014	O-015
21	O-ring	1		O-012	O-012	O-012	O-016
24	O-ring	1		O-007	O-009	O-009	O-009
O-ring set order number:				**OS-011**	**OS-012**	**OS-013**	**OS-014**

Safety diaphragm

Item no.	Name	Quantity pcs.	R101 / 025; R101 / 040			R101 / 050; R101 / 065; R101 / 100				
			RE 160	RE 205	RE 320	RE 205	RE 275	RE 385 / 390 MB	RE 385 / 390 GMB	RE 485
22	O-ring	1	no SD*	O-029	O-033	O-029	O-041	O-042	O-042	O-043
23	Diaphragm	1		M-123	M-143	M-123	M-133	M-163	M-163	M-173
26	O-ring	1		O-013	O-013	O-013	O-013	O-013	O-013	O-013
Safety diaphragm set order number:				**MS-123**	**MS-143**	**MS-123**	**MS-133**	**MS-163**	**MS-163**	**MS-173**

*) due to the small volume, a breather valve BV is recommended for the diaphragm assembly RE160.

© 11.2023_01

Example:

Designation:	Type	DN - Nominal width	RE - Diaphragm assembly	D - Nozzle (valve diameter)	SSV Control device	Main diaphragm	Option
Gas pressure regulator:	R101	050	390*	32.5	MD-R	MB*	SM...

Gas pressure regulator: R101 / 050 / 390* / 32.5 / MD-R / MB*

Spare parts according to tables in 11.3

Main diaphragm and O-ring: **MS-152**
Intermediate diaphragms: **M-005**
Valve plate: **VT-005**
O-ring and sealing ring set: **OS-012**
Safety diaphragm: **MS-163**

Info: The allocation of individual parts is done according to the item no. in the tables in 11.3, conforming to the spare parts drawings in 11.1 and 11.2.

*) When selecting the main diaphragm set for diaphragm assembly RE 385 / 390, a distinction has to be made between MB and GMB. The GMB diaphragm is standard equipment and is therefore not mentioned separately in the controller designation.

Notes

© 11.2023_01

12 Accessories / Options

12.1 Noise Reduction



12.1.1 Use

- Gas pressure regulators RS 250 / RS 251
- Gas pressure regulators RS 254 / RS 255
- Gas pressure regulators R101

12.1.2 Application / Function

The noise reduction made of metallic foam is inserted into the housing of the gas pressure regulator between the valve seat and the housing cover and reduces noise in the gas pressure regulator produced by the flow rate by up to -15 dB (±3 dB).

12.1.3 Mounting

- Unscrew the cover
- Slide the noise reduction (metallic foam) over the spindle and the valve plate until it makes contact with the valve seat
- Screw down the cover again, thus pressing the noise reduction firmly against the valve seat*



© 07.2023_01

12.1.4 Determination of the sound pressure level L_A

The noise of gas expansion at a maximum flow rate of approx. 65 m/s on the outlet side is shown.

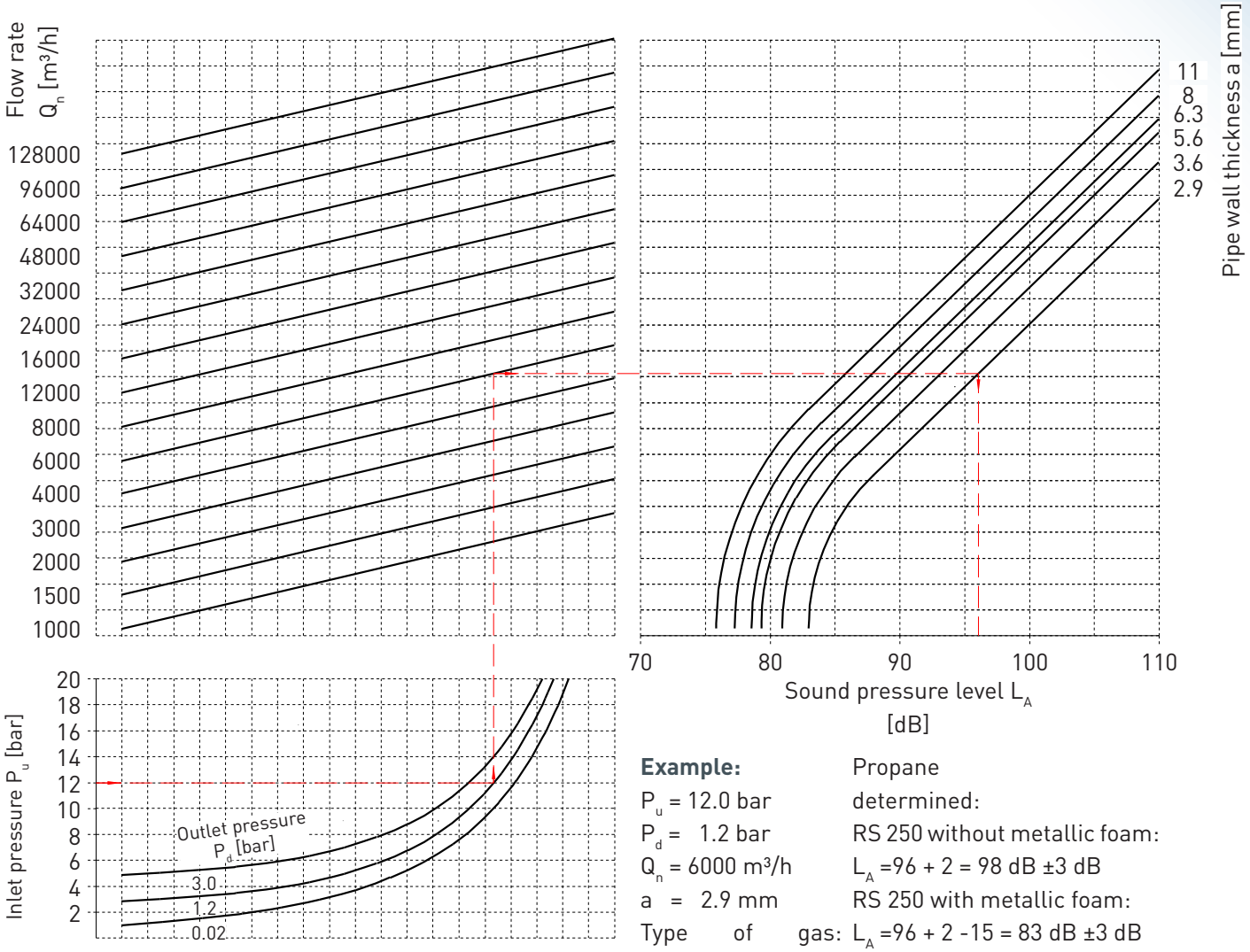

Example: Propane

P_u = 12.0 bar determined:

P_d = 1.2 bar RS 250 without metallic foam:

Q_n = 6000 m³/h L_A =96 + 2 = 98 dB ±3 dB

a = 2.9 mm RS 250 with metallic foam:

Type of gas: L_A =96 + 2 -15 = 83 dB ±3 dB

Reference site: Outlet of the gas pressure regulator, lateral distance 1m

Accuracy: ±3 dB

Correction factor for metallic foam design: ΔL_A up to -15 dB

Correction factors for some gases and gas mixtures

Gas, gas mixtures	ΔL_A [dB]
Acetylene	0
Natural gas	0
Helium	-5.5
Air	+1
Methane	0
Propane	+2
Hydrogen	-9

© 07.2023_01

12.2 High-Pressure Spindle



12.2.1 Use

- Gas pressure regulators RS 250 / RS 251
- Gas pressure regulators RS 254 / RS 255
- Gas pressure regulators R 100 / R 100-U
- Gas pressure regulators R101

12.2.2 Application / Function

The HDS high-pressure spindle is used for simplified adjustment of the control spring in the gas pressure regulator. For the adjustment of particularly strong control springs, the use of a high-pressure spindle is mandatory. (See p. 16 - 17.)

12.2.3 Mounting

- Unscrew the sealing cap
- Unscrew the setting screw anticlockwise
- Take off the spring plate from the spring
  Attention! Do not lose the steel ball!
- Remove the built-in spring
- Insert a new spring
- Insert spring plate again
  Attention! Do not forget the steel ball!
- Screw high-pressure cap with high-pressure spindle into the spring dome

  Do not forget the O-ring!
- On the widths across flats (AF 17) of the spindle, set the regulator to the desired output pressure.
- Screw on the sealing cap
  Do not forget the O-ring!

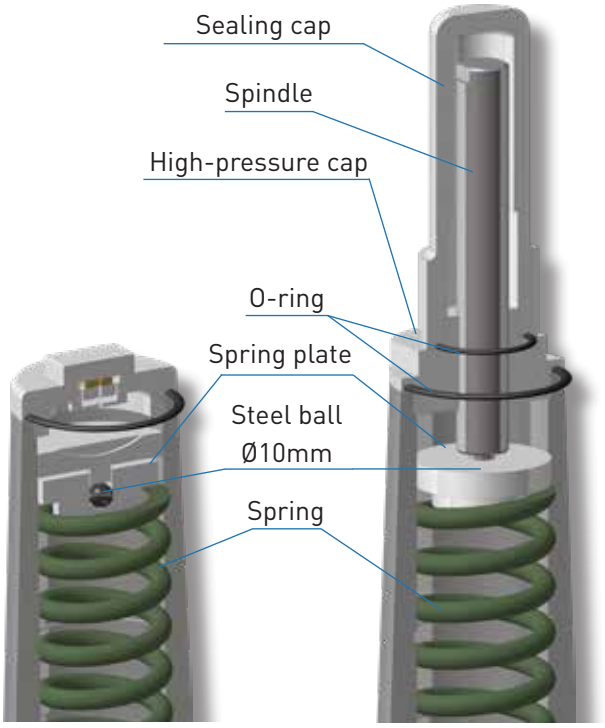

Standard model HD spindle design

12.2.4 Mounting instructions

- **Setting with HD spindle (small spring dome / Ø 70mm)**
  - Screw-in depth T min: 111 mm
  - Screw-in depth T max: 65 mm
- **Setting with HD spindle (large spring dome / Ø 105mm)**
  - Screw-in depth T min: 130 mm
  - Screw-in depth T max: 70 mm
- **Dismounting height HD spindle (small spring dome / Ø 70mm)**
  - X: 260 mm
- **Dismounting height HD spindle (large spring dome / Ø 105mm)**
  - X: 410 mm

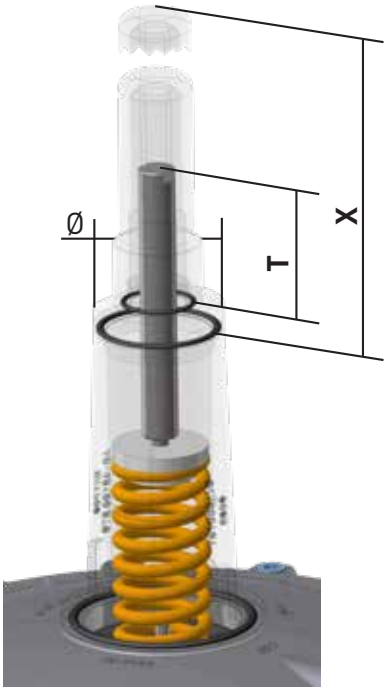

ATTENTION All threads must be oiled!

© 07.2023_01

12.3 RSD3 Restrictor Valve



12.3.1 Use

- For installation in the measurement line or breathing line of the control device

12.3.2 Application / Function

- For the finer adjustment of the control behavior of the regulator
- For a outlet pressure control without fluctuations in the low load range of the regulators

The RSD3 is a throttle valve which regulates the volume flow in the measurement line by means of a continuously adjustable cross-sectional reduction. The setting is made tool-free by means of a rotary knob and can be adjusted using a screw to be fixed. The throttle valve cannot be completely shut off, therefore a guaranteed minimum flow is ensured.

12.3.3 Technical Data

- **Type** RSD3
- **Max. allowable pressure PS** 25 bar
- **Max. operating pressure p_{max}** 25 bar
- **Connection type** on both sides G 1/4“
  Female thread
- **Material** corrosion-resistant steel
- **Temperature range, class 2** -20°C to +60°C
  (operating/ambient temperature)
- **Ex protection**
  The mechanical components of the device do not have any potential ignition sources of their own and are thus not covered by the scope of ATEX 2014/34/EU.

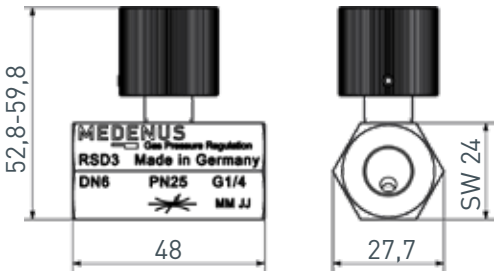

12.3.4 Application example

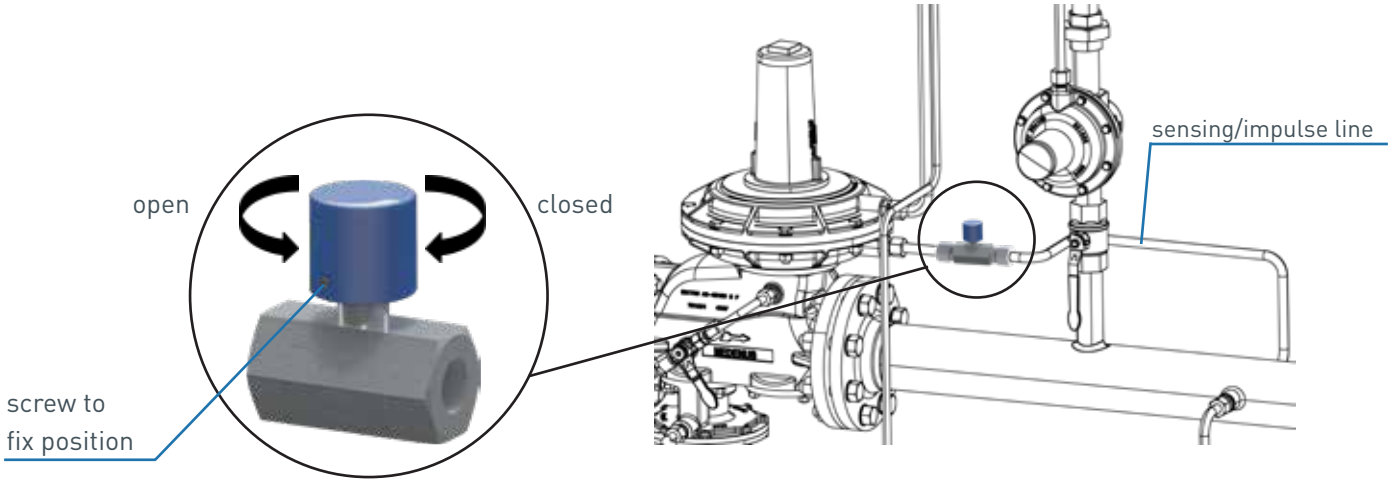

© 07.2023_01

12.4. SM Safety Diaphragm

12.4.1 Use



- Gas pressure regulators RS 250 / RS 251
- Gas pressure regulators RS 254 / RS 255
- Gas pressure regulators R 100 / R 100-U
- Gas pressure regulators R101

12.4.2 Application / Function

In the model with safety diaphragm, the safety diaphragm is located above the main diaphragm. When the main diaphragm ruptures, the safety diaphragm makes contact with the top cover of the diaphragm assembly and prevents any inadmissible escape of gas into the surrounding atmosphere.

12.4.3 Application example

Gas pressure regulator RS250/DN080/385 with safety diaphragm

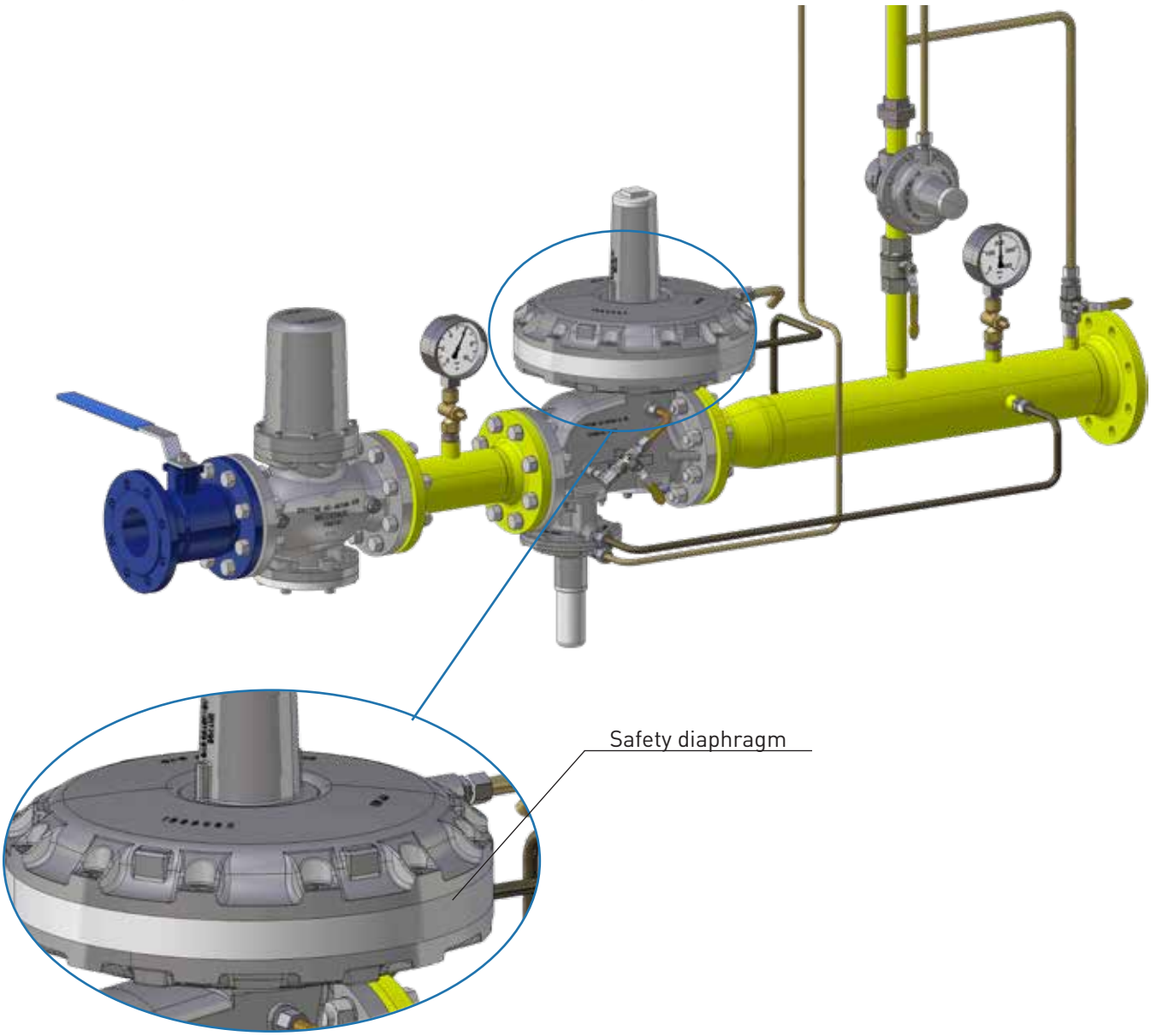

© 07.2023_01

12.5 Breather valve AV530

12.5.1 Use

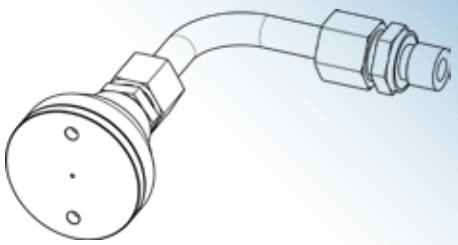

- On SSV control device
- On regulators (pilots)
- With low-dynamic regulation sections (one full stroke)
- On the SRV

12.5.2 Application / Function

The breather valve is used as replacement for the costly and time-consuming laying of breather lines and for securing the installation room against inadmissible escape of gas from diaphragm comparator compartments of gas pressure regulators and safety shut-off valves.

Safety shut-off valves (SSV) of functional class A are triggered automatically and seal gas-tight.

In compliance with EN 12186:2014, the use of the AV guarantees that in case of a defect of the working diaphragm, escape of gas from the breather connection of the gas pressure regulator or of the safety shut-off valve of more than 30 l/h is prevented.

12.5.3 Technical Data

- **Type** AV
- **Max. allowable pressure PS** 25 bar
- **Max. operating pressure p_{max}** 25 bar
- **Max. allowable flow rate** 30 l/h
- **Connection type** Female thread G 1/4"
- **Temperature range class 2** -20 °C to +60 °C (operating/ambient temperature)

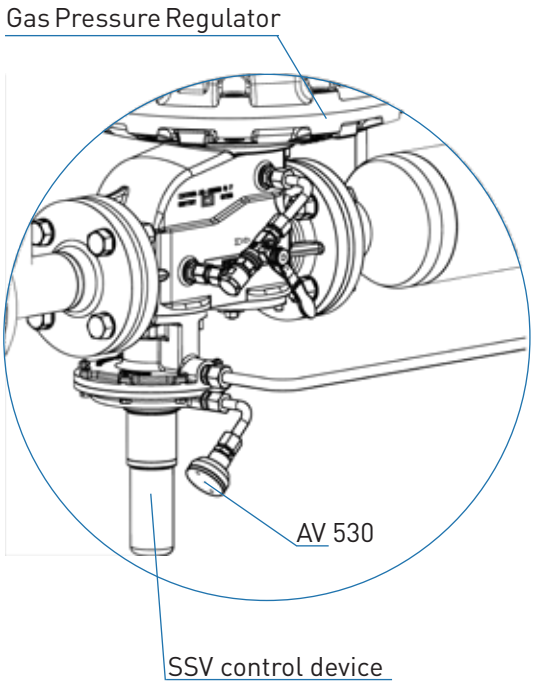

Application example on the SSV

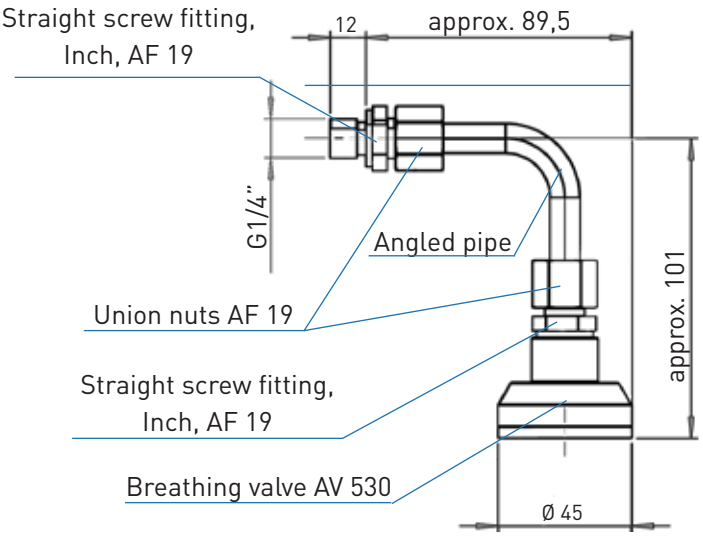

© 07.2023_01

13 Tools

13.1 Brace and Bit with 4-Jaw Chuck



The 3.5 - 16 mm brace and bit with 4-jaw chuck and the accessories available for it are used for precise adjustment of the setpoint spring in your MEDENUS gas pressure regulator.

For further information for use and on the spring data of the setpoint springs, please refer to pages 12 - 13 "Initial commissioning / Recommissioning" and pages 14 - 15 "Diaphragm assembly setpoint spring table".

13.1.1 Accessories for brace and bit with 4-jaw chuck

Gedore screwdriver bit 1/2" slotted 18x2.5 mm



- Hexagon square drive to DIN 3120 - C 12.5, ISO 1174, with ball groove
- Hand-operated, with slip-proof cross knurling
- Chrome-plated
- With pressed-in pin made of GEDORE vanadium special steel, manganese-phosphatized
- Cutting blade to DIN ISO 2380-1 form B

Gedore extension 1/2" 76 mm



- Model to DIN 3123, ISO 3316
- For hand-operated socket wrench inserts with square drive to DIN 3120, ISO 1174, with ball detent
- GEDORE vanadium steel 31CrV3, chrome-plated

Gedore extension 1/2" 76 mm



- Model to DIN 3123, ISO 3316
- For hand-operated socket wrench inserts with square drive to DIN 3120, ISO 1174, with ball detent

- GEDORE vanadium steel 31CrV3, chrome-plated

13.2 SSV Tightening Tool

The tightening tool made of stainless steel is used for replacing the SSV diaphragm in your MEDENUS safety shut-off valve.



Old design

Old design
- Width across flats 22
- Stainless steel 42CrMo4



New design

New design
- Width across flats 32
- EN AW-2007 or similar

© 07.2023_01

Declaration of Conformity

Manufacturer: Medenus Gas-Druckregeltechnik GmbH
Address: Im Langen Feld 3
D-57462 Olpe

declares under sole responsibility that the product:
R 101 Pressure regulator (spring-loaded proportional regulator)

have been subjected to an EC-type examination and conform to the basic requirements of the directives GAR (EU) 2016/426 EC-Gas Appliances Regulation and 2014/68/EU A III B EC-Pressure Equipment Directive in the respective current version.

Marking (PIN) according to Pressure Equipment Directive and Gas Appliances Regulation

CE-0085AQ0881 model R 101

Notified body (EU type examination: Module B)	DVGW CERT GmbH Josef Wirmer Straße 1-3 D-53123 Bonn, Germany Notified Body number: 0085

The basis of the EC type examination are the harmonized European standards and / or national standards, as well as the European directives and / or regulations:

2014/68/EU A III B EC Pressure Equipment Directive	(15.04.2014)
GAR (EU) 2016/426 A III B EC Gas Appliances Regulation	(09.03.2016)
DIN EN 334	(01.11.2019)

Monitoring of the EC quality assurance system (module D)	DVGW CERT GmbH Notified Body number: 0085

Registration No. Pressure Equipment Directive **SD-0085BQ0510**
Registration No. Gas Appliances Regulation **SE-0085BQ0510**

Olpe,
07.08.2023

Alexander Christiani
Managing Director

Notes

© 11.2023_01

MEDENUS Gas-Druckregeltechnik GmbH
Phone +49 (0)2761 82788-0
Fax +49 (0)2761 82788-9
Im Langen Feld 3 / D-57462 Olpe
info@medenus.de
www.medenus.de

EN